EUROPEAN RESUSCITATION COUNCIL

ERC Course Rules

v. 2.0
Final discussion by JICC 11/12/2014
Approved by Board 12/12/2014

1. **Objectives**
2. **Terminology and Definitions**
   - -Types of training
   - -Titles and Functions
   - -Other definitions
3. **General**
4. **Courses**
   - -Course Organisation
   - -Course Organisers
5. **Eligibility**
6. **Course Content**
7. **Assessment**
   - -Continuous Assessment
   - - Summative Assessment
   - -MCQs
   - -Practical assessment stations
   - -Retest
   - -Resit
   - -Instructor Potential (IP)
8. **Certification**
9. **Faculty**
   - -Course Director (CD)
   - -Course Director Candidate (CDC)
   - -Full Instructor (FI)
   - -Instructor Candidate (IC)
   - -Instructor Trainer (IT)
   - -Educator (Ed)
   - -Educator Candidate (EdC)
10. **Recertification**
    - -Recertification of Providers
    - -Recertification of Instructors
    - -Recertification of Instructor Trainers
    - -Recertification of Course Directors
11. **Conversion**
    - -RC (UK) courses
    - -AHA courses
    - -NRC courses
    - -Other organisations' courses
12. **Specific Rules according to Course Type**
    - -BLS/AED provider specific
    - -EPALS specific
    - -EPILS specific
    - -NLS specific
    - -ALS specific
    - -ILS specific
    - -BLS/AED instructor specific
    - -GIC specific
    - -EMC specific
13. **Complaints procedure**
14. **Attached documents**

1. Objectives

1.1. The objective of training is to equip the learner with the ability to undertake resuscitation in a real clinical situation at the level at which they would be expected to perform, be they lay bystander, first responder in the community or hospital, a healthcare professional working in an acute area, or a member of the medical emergency or cardiac arrest response team.

1.2. The courses are taught by trained instructors who have undertaken an ERC course in teaching and assessment. Teaching is conducted by encouragement with constructive feedback on performance rather than humiliation. First names are encouraged among both faculty and candidates to reduce apprehension, and the mentor/mentee system is used to enhance feedback and support for the candidate. Stress is inevitable, particularly during assessment, but the aim of the instructors is to enable the candidates to do their best.

2. Terminology and Definitions

Types of training

2.1. Basic Life Support (BLS) course,
Basic Life Support / Automated External Defibrillation Provider (BLS/AED-P) course
The aims of the BLS/AED provider courses are to enable each candidate to gain competency in both BLS and AED. BLS/AED courses are appropriate for a wide range of providers. These may include clinical and non-clinical healthcare professionals (particularly those who are less likely to be faced with having to manage a cardiac arrest), general practitioners, dentists, medical students, first aid workers, lifeguards, those with a duty of care for others (such as school teachers and care workers), and community responders, as well as members of the general public.

2.2. Immediate Life Support (ILS) course
The ILS-course aims to train healthcare providers in the ABCDE approach to the deteriorating patient, Basic Life Support, simple airway management and safe defibrillation (manual and/or AED), enabling them to manage patients in cardiac arrest until the arrival of a resuscitation team and to participate as members of that team.

2.3. Advanced Life Support (ALS) course
The ALS course aims to train candidates to highlight the causes of cardiac arrest, identify patients in danger of deterioration and manage cardiac arrest and the immediate peri-arrest problems encountered in and around the first hour or so of the event. The target candidates for this course are doctors, nurses and paramedics working in emergency areas of the hospital or Emergency Medical Systems, and those who attend cardiac arrests on a regular basis or may be expected to lead a cardiac arrest team. It can also be suitable for individuals who are regularly members of resuscitation teams or regularly working in the EMSs. The course is also suitable for senior paramedics and specialist hospital technicians.

2.4. European Paediatric Immediate Life Support (EPILS) course
EPILS is aimed at training healthcare providers to recognise and manage critically ill children and children in cardiorespiratory arrest whilst awaiting the arrival of a resuscitation team (1 to 5 minutes). EPILS will also train the candidate to participate as members of that team.

2.5. European Paediatric Advanced Life Support (EPALS) course
The EPALS course is designed for healthcare professionals who are involved in the resuscitation of a child, infant or newborn whether in or out of hospital. The course aims to provide caregivers with the knowledge and skills for the management of the critically ill child during the first hour of illness, and to prevent progression of diseases to cardiac arrest.

2.6. Newborn Life Support (NLS) course

The NLS course aims to provide the detailed knowledge and practical instruction in resuscitation of babies at birth. It is designed for all health workers, regardless of their discipline or status, who may be called upon to resuscitate a newborn baby.

2.7. BLS/AED-instructor (BLS/AED-I) course

Many candidates attending a BLS/AED Provider Course are laypeople, and some subsequently want to become instructors themselves. For this reason, the ERC has developed a one-day BLS/AED Instructor Course. Candidates for this course must be healthcare professionals or laypeople who hold the ERC BLS/AED provider certificate, and have been designated as IP (see below).

2.8. Generic Instructor Course (GIC)

This course is for candidates who have attended ALS, EPALS, ILS, EPILS, NLS or ETC (European Trauma Course) provider courses and been recommended as having Instructor Potential (IP) by the course faculty. The course concentrates on teaching technical and non-technical skills, leading team-work, providing feedback, assessing knowledge, skills and attitudes.

2.9. Educator Master Class (EMC)

The Educator Master Class trains selected Instructor Trainers or Medical Educators in the field of Resuscitation (e.g. resuscitation officers or members in a BLS training centre) to become Educator Candidates.

2.10. Refresher Seminar (RS)

A Refresher Seminar is a short modular skills training, organised for participants with prior experience in the Seminar topic.

2.11. Recertification Course (RC)

A recertification course is one of the three ways a provider can re-certify their provider skills, as outlined in 10.3.

2.12. Conversion Course

A Conversion Course is part of the conversion process of instructors who were trained by other organisations. It focuses on the educational aspects of the ERC courses and is instructed by ERC senior Instructor Trainers (ITs) chosen by the International Course Committee (ICC) chair of the relevant course type.

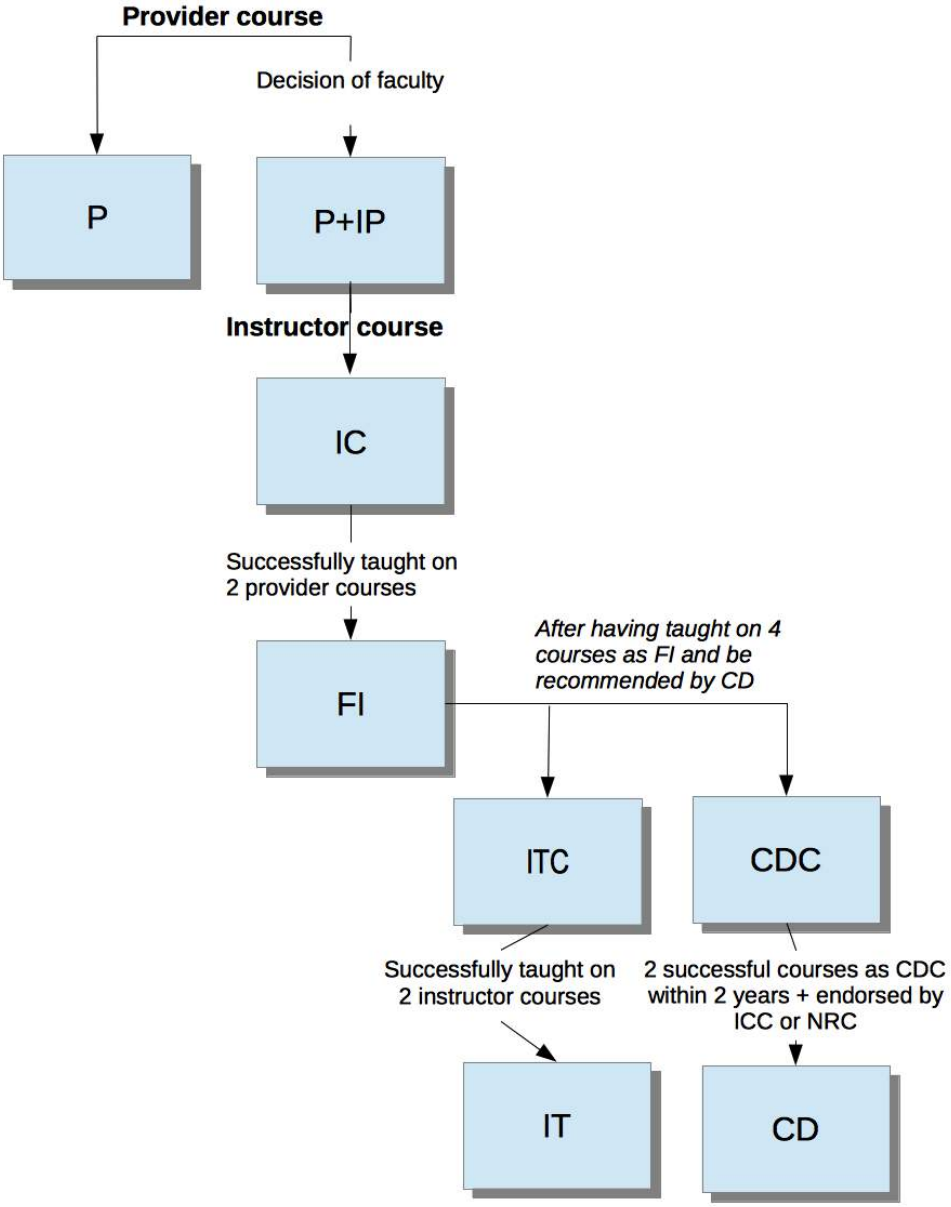

Figure 1: Flow chart - instructor

Titles and functions

2.13. Faculty

Course Director, Course Director Candidate, Full Instructors, Instructor Candidates, Instructor Trainers, Instructor Trainer Candidates, Educators and Educator Candidates make up the faculty of ERC courses.

2.14. Provider (P)

A Provider is an individual who has successfully completed a provider course (BLS, BLS/AED, ILS, ALS, EPILS, EPALS, NLS).

2.15. Instructor Potential (IP)

An Instructor Potential is an individual who has completed a provider course or recertification course successfully and has shown an aptitude to teach. In addition, he or she must fulfil the criteria necessary to qualify as a future instructor and have been recommended for IP status by the Faculty of that course. Only candidates identified as Instructor Potentials are eligible to attend an Instructor Course.

2.16. Instructor Candidate (IC)

An Instructor Candidate is an individual who has passed an Instructor Course successfully (BLS/AED Instructor Course or Generic Instructor Course).

2.17. Full Instructor (FI)

A Full Instructor is an Instructor Candidate who has successfully completed his FI training as described in the "Faculty" section below and has recertified if required [10.4-10.8]. Full Instructors teach on a provider course.

2.18. Instructor Trainer Candidate (ITC)

A Full Instructor from a relevant course type who is invited to teach on an Instructor Course, is called an Instructor Trainer Candidate until upgraded to Instructor Trainer.

2.19. Instructor Trainer (IT)

Instructor Trainers teach on an Instructor Course after successfully having completed their Instructor Trainer Candidate training and after having recertified if required [10.5-10.8].

2.20. Course Director Candidate (CDC)

A Course Director Candidate is an experienced instructor for that course type who is invited to shadow the Course Director. The Course Director Candidate is not an assistant, but a Course Director-in-training.

2.21. Course Director (CD)

A Course Director is a senior instructor who takes overall responsibility for the course and ensures that the course is run according to ERC guidelines and rules. Course Directors exist at the level of provider courses (Provider Course Director) and instructor courses (Instructor Course Director). He or she sets out the programme and appoints the instructors. The Course Director also approves the results of the course candidates and assesses the instructors and CDCs.

2.22. National Course Director (NCD)

A National Course Director is an experienced CD, endorsed by the relevant National resuscitation Council (NRC), who represents the Course Directors of a type of course of a certain country. They have voting rights in the election to select ICC members, if the NRC is self-sufficient for that type of course.

An NCD must meet all points in the following profile:

- Must be ERC Associate member
- Must already be an established course director for this type of course
- Must have good communication skills (including E-mail)
- Must have a working knowledge of English
- Must have credibility in own country and be involved in NRC (if one exists)
- Must be prepared and able to attend international meetings of ERC NCDs (ERC is planning one meeting every year)
- Leadership skills to lead development of the course in their country
- Involved in developing and spreading ERC courses in own country
- Familiarity with ERC systems - (CMS etc)

If there is no NRC in a certain country, the ICC can appoint the NCDs directly.

2.23. Educator Candidate (EC)
An Educator Candidate is an individual who has passed an Educator Master Class successfully.

2.24. Educator (Ed)
An Educator is a person with an educational and clinical background who has undertaken the Educator training. The presence of an Educator is mandatory for the Generic Instructor Course.

2.25. Educator Trainer (EdT)
Faculty on an Educator Master Class are called Educator Trainers.

2.26. Course Organiser (CO)
The Course Organiser is an individual or an organisation, who administers the financial and logistical aspects of the course.

Other definitions

2.27. Self-Sufficiency
A National Resuscitation Council is considered as self-sufficient for a certain type of course if:

- It has the resources, expertise, and experience to run courses, and has demonstrated an ability and commitment to maintain the quality of training agreed with the ERC in accordance with the document Self-Sufficiency. (Attached to this document)
- There is a formal written agreement of partnership between the ERC and the NRC in which the responsibility for the national supervision and quality control rests with the National Resuscitation Council.

Nevertheless, all ERC courses are organised under supervision of the respective International Course Committee.

2.28. International Course Committee (ICC)
The ICCs are appointed according to art. 3.c of the ERC Bylaws.

The ICCs are responsible for the further development and quality control of their type of course, and oversee courses in those countries that are not self-sufficient, in partnership with the National Resuscitation Council, if one exists.

2.29. Joint International Course Committee (JICC)
2.30. The Joint ICC is made up of the chairs and vice chairs of each ICC and a representative of the Working Group on Education (WGE)

2.31. Working Group on Education (WGE)
The Working Group on Education (formerly Educational Advisory Group) has been constituted according to art. 3.b of the ERC Bylaws, to advise the ERC Board and ICCs on educational matters (including format of courses, methods of teaching, training of instructors, etc.).

2.32. Course Management System (CMS)
The Course Management System is the online application, provided by the ERC, to administer the ERC courses, qualifications, permissions and certificates.

2.33. Cardiac Arrest Simulation (CAS)
On ERC courses, there may be Scenario Demonstrations (CASdemos), as well as sessions covering scenario teaching (CASteachs) and assessment (CAStests).

2.34. Multiple Choice Question (MCQ)
Multiple choice is a form of assessment in which respondents are asked to select the best possible answer (or answers) out of a list or True/False option.

2.35. Retest
A Retest grants a participant the opportunity to repeat a practical Skill or CASTest during the current course.

2.36. Resit
A Resit is granting a participant the opportunity to repeat their MCQ or CASTest Retest on a future course or a specific limited course for this purpose.

2.37. Recertification
Recertification is the process of renewing a course-related ERC qualification.

2.38. Basic Courses
BLS/AED-P is a Basic Course.

2.39. Advanced Courses
ALS, ILS, EPALS, EPILS and NLS are Advanced Courses.

2.40. Instructor Courses
BLS/AED-I and GIC are Instructor Courses. The BLS/AED-I course is the relevant instructor course for Basic Courses. The GIC is the relevant instructor course for the Advanced Courses.

2.41. Document Library
The Document Library is the online collection of available ERC Documents on the ERC website.

2.42. Cost Of Living Adjustment (COLA) factor
The COLA factor is the percentage of the Gross National Income (GNI) of a country in relationship to the "High Income" GNI from the list of the World Bank, rounded off to the nearest 10, with a minimum of 20% and a maximum of 100%. The list of COLA factors is confirmed by the Board annually.

2.43. Credits
Credits can be considered as the ERC monetary units. They are ordered online by Course Organisers and are used to pay invoices related to courses to the ERC.

The number of credits needed per participant is related to:
- The type of course
- The COLA factor of the country where the course is organised

2.44. Course Collaboration Agreement (CCA)
A CCA is an agreement between the ERC and a registered Non-profit Organisation (NPO) in order that the NPO receives CO permissions for a country without an NRC.

3. General

3.1. All Faculty members and COs must abide by the ERC Code of Conduct. (Attached to this document.)

3.2. Any profit made from courses, should be reinvested in comparable training.

3.3. Each course must be registered and completed in the Course Management System (CMS) resulting in the creation of certificates.

3.4. Each participant on a course should receive a personal, official ERC manual.

3.5. The core programme for each course type exists in the Document Library, a list of possible exceptions will be kept up to date in that location.

3.6. The Joint ICC can grant exceptions to the rules in this document, provided it is on a pilot basis for a limited group and time, under the supervision of an ICC member, and ends with an evaluation report to the Joint ICC.
The Joint ICC can then decide:

- To stop the pilot
- To adjust the pilot, with a new timing
- To implement it in the course rules, making it applicable or available for all

3.7. NRC/ERC
NRCs may decide about additional rules for local instructors and local course directors. For those faculty members coming from abroad, only the ERC rules apply.

4. Courses

Course Organisation

4.1. The number of participants per course should not exceed 36, split into groups each of a maximum of 6 participants. If there are more than 36 participants, they should be divided into separate courses each with their own CD and faculty.)

4.2. The CD is responsible for the composition of the faculty. The minimum criteria are:

4.2.a. The number of ICs should never exceed the number of FIs

	BLS/ AED P	BLS/ AED I	ILS	EPILS	ALS	EPALS	NLS	GIC	EMC	RS
4.2.b. Minimum Faculty	1 FI[1] per 6 participants				1 FI[1] or IC per 3 participants					Depends on seminar topic
4.2.c. Minimum # of participants		4	6	4	12					
4.2.d. Minimum age of participants		18						18		
4.2.e. Minimum duration (excluding breaks)	4hrs	7hrs	6h50	6h50	14hrs	15h40	7h	14hrs		
4.2.f. MCQ time					60 min	45 min	30 min			
4.2.g. Pass Mark MCQ					75%		80 %			
4.2.h. Minimum duration recertification course (excluding breaks)	At the discretion of CD		3h15		6hrs	6hrs				
4.2.i. # of credits [2]	1	2			6		2			
4.2.j. Standard validity of certificates[3]	3 yrs, with possibility for NRC to choose 1 to 5	(See 10.5)	3 years, with a possibility for the NRC to choose a number between 1 and 5					(See 10.5)		

[1] This includes the CD; the CDC does NOT count as FI for this purpose.
[2] The number of credits that the CO needs to pay to the ERC per participant registered, to be multiplied by the COLA factor.
3 The NRC can decide the validity for each course type in their country, they can also choose if the validity is shown on the certificates or not.

4.3. All Advanced Courses should have a multidisciplinary faculty. Faculty members should have relevant ERC qualifications in order to teach on a course.

4.4. For Advanced Courses, course material must be forwarded to the participants at least 4 weeks in advance with advice concerning pre-course preparation and completion of pre-course papers. It should be emphasised that the course itself is a revision exercise. Advance Course participants normally must come from healthcare environments. Others may attend as 'observers' but their presence must not detract from the teaching provided to full course members.

4.5. Participants must only be tested on the material and information contained in the manual.

4.6. Participants should complete the online survey via the CMS.

4.7. Course details need to be completed in the CMS within a period of 2 months after the course.

4.8. Equipment must be available in accordance to the provided equipment list and be in sound working order.

4.9. ERC MCQs and exams may not be altered in any way.

Course Organisers (CO)

4.10. Only someone with ERC CO permissions for the particular course type in the country in question can organise ERC courses.

4.11. Requesting CO permissions:

4.11.a. Applications to become CO should be made in writing via the CMS and include the following information: A description of the organisation (including a mission statement, location(s), working area, board of directors/management, kinds of courses organised, numbers of certificates, number of instructors, education of instructors, quality control measures, number of staff, website address, ...) The decision to approve CO permission will be taken by the self–sufficient NRC or in other cases, the chair of the ICC for that course type.

4.11.b. Requests from organisations to receive CO permissions in a country without an NRC can be supported by the relevant ICC chair and GPC (General Purpose Committee – see ERC statutes) on the additional condition that a CCA is signed.

4.11.c. Individual requests from FI to receive CO permissions for a **provider course** in a certain country which is not the residence of the FI and that target country does not have an NRC can be supported by the relevant ICC Chair on the conditions that

- This request has the support from the FI's NRC.
- There is an exact plan, vision and goal.
- The FI, as a CO, takes responsibility from an organisational and financial point of view.

4.11.bis The self-sufficient NRC or in other case the ICC chair may grant CO permissions, based on the criteria of 4.14. In case a prioritisation is required, this is based on objective, pertinent criteria, both prioritisation and criteria subject to an appeal on a JICC level.

4.12. CO permission is granted for a period of up to two years at the end of which the permission will be evaluated by the Self-Sufficient NRC or the chair of the ICC for that course type. A decision will be taken whether to renew and points for improvement will be shared. In the case of severe violation of the CO conditions or repeated recommendations without improvement, CO permission can be withdrawn or not renewed.

4.13. Where concerns about individual COs have come to light they may be assessed and reviewed at any time at the discretion of the Self-Sufficient NRC or the chair of the ICC for that course type. These structures reserve the right to revoke CO permissions.

4.14. Course Organisers have to meet the following conditions:

4.14.a. To have adequate administrative and secretarial resources

4.14.b. To have access to a sufficient number of faculty members to run the required courses

4.14.c. To comply with this ERC Course Rules document
4.14.d. To make available the training materials required for each course
4.14.e. To be able to deliver these training materials in a timely manner to the course venues
4.14.f. To be able to organise the necessary course catering facilities
4.14.g. To use only official ERC manuals for ERC courses (Preliminary versions of translated manuals can be used additionally to the official ERC manual)
4.14.h. To facilitate agreed course visits and reviews by ERC and NRC, to consider any subsequent recommendations, and to implement them as appropriate
4.14.i. To organise a sufficient amount of courses as decided by the Self-Sufficient NRC or the chair of the ICC for that course type. A guideline figure would be 2 courses every 2 years for each course type.
4.14.j. To keep a record of participant results for the duration of validity period of their qualification, with a maximum of 5 years.
4.14.k. To organise ERC courses efficiently including the following:
- Register courses in advance in the Course Management System (CMS)
- Provide correct and complete data
- Send information to participants and instructors in advance of the course, to include venue, lodging, timing, programme, any pre-tests, and if relevant a copy of the appropriate manual(s)
- Create ERC certificates via the CMS and issue to successful participants; create ERC letters of attendance via the CMS and issue to those who were not successful or were not tested.
- Handle efficiently the financial obligations related to courses:
  - Collect participation fees correctly
  - Reimburse travel and other expenses incurred by instructors in a timely manner
  - Settle ERC and NRC invoices related to courses by the due dates
- To encourage all participants to fill in ERC online course evaluation forms, to consider such evaluations, and to take appropriate action to rectify any shortcomings reported

4.14.l. To accept, as far as possible, ICs and CDCs from within and from outside the COs own organisation, as a faculty member on their courses, free of charge.
4.14.m. To make sure that faculty members are indemnified for civil liability.

4.15. The Course Organiser liaises with the Course Director and with the NRC or ERC Office/CMS.

5. Eligibility

5.1. Participants should undertake and revise Basic Life Support training before undertaking the course. (Relevant for all courses except BLS/AED P)

5.2. A pre-course test can be used to prepare participants for the course and participants should be advised to read the manual before answering the test. Participants who do not satisfactorily complete the pre-course test can be refused attendance on the course. The pre-course test mark does not contribute to the final result.

5.3. For disabled candidates the ERC policy for disabled candidates is followed. (Attached to this document)

5.4. Participants of advanced courses will usually be healthcare providers; others may attend as 'observers', but their presence must not detract from teaching provided to full course members.

5.5. Participants of Instructor courses must have a valid ERC IP status.

6. Course Content

6.1. The teaching element of the courses can include lectures, skill stations, workshops, e-learning tools, closed and open discussions and simulation sessions.

6.2. It is the responsibility of the CD to ensure suitable allocation of the teaching sessions taking into account credibility, knowledge base and faculty requirements.

6.3. Course structure must follow the official ERC course programme. Some of the items in the programme may be moved forwards or backwards to allow for local timetabling, but only at the discretion of the CD.

6.4. The standard programme provided by ERC outlines the minimum required exposure to practice and testing stations.

6.5. The ERC format of the courses and course material, as made available via the ERC Document Library, must be used. Some additional slides or equipment may be used in lectures after approval of the ICC but this should not be at the expense of other programme items. All topics must be covered.

6.6. Where local circumstances require the inclusion of additional skills, optional modules may be added to the core course content. This can increase the course duration.

7. Assessment

7.1. According to the specific course rules per course type, participants can be assessed using either continuous or summative assessment, or both.

Continuous Assessment

7.2. Continuous Assessment is guided by the assessment forms for each core skill.

7.3. Copies of the Continuous Assessment forms should be provided to the participants in advance, along with their manual.

7.4. If a candidate has not met the recognised criteria, they should be given a copy of their assessment form(s) and offered remedial help.

Summative Assessment

7.5. All participants should be given the possibility of completing all Assessment Stations regardless of their results for other Stations.

7.6. All question papers are copyright protected and must not be loaned, copied or taken away from the course site by anyone other than the CD or CO.

MCQs

7.7. Participants with special needs may be granted additional time (e.g. 30 minutes) to complete the paper, at the discretion of the CD. This must be agreed in advance of the exam.

7.8. Answers must be confined to the answer sheet provided and all question papers and scrap paper must be handed in.

Practical assessment stations

7.9. Each practical assessment must be carried out by at least one Full Instructor. For Advanced Courses, testing should include another member of the faculty. If an IC is leading the assessment this must be under the supervision of a FI.

7.10. Practical skills should be assessed through Skills and/or CASTest stations.

7.11. CASTest on Advanced Courses: Participants must be tested using one of the standardised testing scenarios provided. The CD shall decide which scenario(s) are used for testing the participants. If multiple scenarios are used, they should be allocated to participants in a random manner. Additionally, a third helper, who may be an additional FI/IC, an IP or trained assistant, may be used.

Retest

7.12. Retest for a failed MCQ is not possible; in this case a Resit must take place.

7.13. Each participant on the course will be entitled to an immediate Retest on any practical Skill or CASTest. These are conducted using a different CASTest selected in advance by the CD.

7.14. A **different** Instructor appointed by the CD should assess the retest.

7.15. Only if a participant fails either the CASTest Retest or the MCQ, may the faculty decide to refer them to a Resit, this decision must be confirmed by the CD. In other cases the entire course will need to be repeated as a regular participant.

Resit

7.16. The Resit can take place on a future course or a specific limited course for this purpose, within a period of 1 year, by different faculty members.

7.17. An MCQ Resit should be a different paper taken under invigilated conditions and under responsibility of a CD.

7.18. Only those Resit participants who complete their Resit successfully will be considered to have passed the course. If a participant fails a Resit their only option is to repeat the entire course, in which case they are considered a regular participant.

Instructor Potential (IP)

7.19. Candidates who show exceptional ability and aptitude during a provider course or recertification course may be considered for Instructor training.

7.20. Candidates are eligible for consideration for Instructor training only after being nominated and seconded by Instructors at the final faculty meeting. The whole faculty should then discuss each nominated candidate's performance using the IP selection form and guidance.

7.21. Recommendations for IP should ideally be unanimous, but if one faculty member is opposed, the CD may make the final decision.

7.22. All recommendations for IP must be marked online on the result sheet and the related documentation should be stored, noting the IP names.

7.23. Those recommended as having IP should be informed immediately after the course by the CD. Upon the creation of certificates, the CMS will issue additional information and explain the process of becoming an Instructor and how to register for an Instructor course. (This depends on the correct logging of the participant's email address in the CMS).

7.24. IPs may gain experience by observing a provider course before undertaking the Instructor Course.

7.25. IPs are eligible to undertake the relevant Instructor Course within five years, as long as they continue to hold a valid provider certificate.

8. Certification

8.1. At the end of the course an official ERC Certificate will be issued to successful candidates using the ERC online Course Management System (CMS). This is not a certificate of competency.

8.2. Participants cannot complete the course successfully unless they are present throughout the course. If, for a legitimate reason, a candidate misses an element of the course, then provided they successfully pass all the assessment components they may be permitted to complete the missed element on another course within 1 year.

8.3. Participants of Provider Courses who have completed all the assessments successfully will receive a Provider certificate.

8.4. All provider certificates are valid for one to five years as specified in 4.2.j. The NRC can reduce the validity of each course type certificate in their country.

8.5. It is the responsibility of the holder of the certificate to maintain their skills.

8.6. A participant who has passed a course will receive a certificate stating their successful completion of the course. A participant who needs to attend a Resit will receive a letter outlining which Stations they successfully completed and which need to be assessed again during such Resit. A participant who fails a course receives a letter of attendance.

8.7. NRCs may charge additional credits up to 4 times the number of credits charged by the ERC per participant. These credits are sold and collected by the ERC and the NRC amount is credited every 3 months based on the average credit price.

9. Faculty

9.1. At least 50% of the FIs must be the same for the whole course, and always in the previously mentioned ratios.

Course Director (CD)

9.2. Each course must be led by a CD who is qualified for the relevant course type. ILS and EPILS courses can be directed by ALS and EPALS FI respectively. A course can have maximum 1 CD.

9.3. The CD sets out the programme and invites the instructors. He or she also approves the results of the course candidates and assesses the instructors. The CD will be responsible for recommending CDCs to become CDs. They are responsible for ensuring the smooth running of the course. The CD must ensure that records are kept during the course and is responsible for completing the CD's report in the CMS at the end of the course. The CD is responsible for ensuring that the course fully complies with the regulations. Where the regulations are not met, the approving body may withdraw course approval or CD qualifications or CO permissions.

9.4. On Advanced and Instructor courses, or courses where a CDC is to be assessed, the CD must be present throughout the entire course.

9.5. CDs are entitled to direct ERC courses in any country, as long as they adequately speak the language of the course, comply with the CD requirements of the local NRC, and are invited by a Course Organiser, recognised in that country.

Course Director Candidate (CDC)

9.6. A CDC is an experienced instructor who is invited to shadow the CD.

9.7. In order to be eligible to be selected as a CDC, an Instructor needs to have taught on at least 4 entire courses of the same type as FI and be invited to act as CDC on a course by a CD.

9.8. Once a FI has been selected as CDC they need to complete at least 2 courses, within 2 years and preferably with 2 different CDs, of the same type as CDC to the satisfaction of the CD before they can be upgraded to CD.

9.9. The upgrade to CD needs the approval of the National Resuscitation Council of the CDC's residency, self-sufficient for that type of course or, in the absence of that, by the Chairman of the ERC International Course Committee of that course.

9.10. A course can have maximum 1 CDC.

9.11. The CDC must be present throughout the entire course.

Full Instructor (FI)

9.12. Full Instructors are entitled to instruct on ERC courses in other countries, as long as they

- Adequately speak the language of the course;
- Are invited by a Course Organiser, recognised in that country;
- Instruct under supervision of an ERC Course Director.

9.13. FIs must teach at least 2 courses per 2 years and must be reassessed at least every 6 years. A Self-Sufficient NRC or the chair of the ICC for that course type can decide to extend the 2 year period to 3 years in case of an insufficient number of courses in that country over a period of 2 years to comply to this rule.

9.14. FIs are entitled to full reimbursement of all expenses incurred as a result of attending a course as a member of the faculty after approval by the CO and in line with the ERC travel policy.

Instructor Candidate (IC)

9.15. Achievement of FI status requires completion of 3 elements:

9.15.a. Attendance at a provider course and selection for IP

9.15.b. Attendance of a relevant Instructor Course (or recognised equivalent as outlined in the conversion section)

9.15.c. Successful completion of teaching practice(s).

9.16. After successful completion of an Instructor Course, all ICs are required to teach on two Provider courses to the satisfaction of the CD before FI status is granted and a certificate issued. If, however, upon the completion of the first course as IC, the Provider CD and faculty unanimously recommend that a second assessment is unnecessary, an exception can be requested to the Self-Sufficient National Resuscitation Council or the ICC Chair upon entering the results in the CMS.

9.17. If, after 2 courses as IC, the candidate has not reached the required standard, an additional opportunity to serve on another course as an IC may be offered. Alternatively, the CD may decide to revoke the candidate's IC status.

9.18. While teaching, an IC should always be supervised by a FI.

9.19. Where possible, an IC should gain experience teaching and assessing each of the different teaching and assessment methods.

9.20. The IC must be present for the entire Provider course.

9.21. ICs should be given feedback on their performance in all teaching sessions by FI nominated by the CD. These assessments must be discussed with the IC.

9.22. An IC should complete both teaching practice(s) within 2 years of the date of their relevant instructor course, unless exceptional circumstances prevent this. It is possible for this period to be extended to 3 years following application by the IC to the ERC office, to be approved by the relevant ICC chair.

9.23. Existing FIs who are recommended as having IP on a different course type may proceed directly to IC status for that course type. They then need to teach on only one course to the satisfaction of the CD in order to become FI of the new course type.

9.24. Existing ICs who are recommended as having IP on a different course type may proceed directly to Instructor Candidate status for that course type, they then need to teach on two courses to the satisfaction of the CD in order to become FI of the new course type.

Instructor-Trainer (IT)

9.25. a GIC Instructor-Trainer Candidates can be upgraded to Instructor-Trainers by the GIC Course Director and endorsed by the Educator, after having successfully completed teaching on at least two GIC courses.

9.25 b BLS/AED Instructor-Trainer Candidates can be upgraded to Instructor-Trainers by the BLS/AED-I Course Director, after having successfully completed teaching on at least two BLS/AED-I courses.

Instructor Trainer Candidate (ITC)

9.26. FIs who show exceptional ability and aptitude during instructing on a provider course may be considered for Instructor Trainer Candidate status.

9.27. An ITC is an experienced FI who is invited to act as ITC on an Instructor course.

9.28. In order to be eligible to be selected as a ITC, a FI needs to have followed a relevant ERC Instructor course or equivalent (11.1), taught on at least 4 courses of the same type as FI and be invited to act as ITC on a course by a CD of an Instructor course.

9.29. Once a FI has been selected as ITC they need to complete at least 2 courses of the same type as ITC to the satisfaction of the CD before they can be upgraded to IT.

9.30. The ITC must be present throughout the entire Instructor course.

Educator (Ed)

9.31. Eds must take part in a minimum of one Instructor course, educator meeting or medical education conference in 2 years.

9.32. Educators who are also GIC Directors cannot undertake the role of Educator in the same course.

Educator Candidate (EdC)

9.33. Apply to attend an EMC.

9.33.a. Application to attend an EMC: Possible participants should submit

- CV
- Covering letter outlining the reasons they wish to be considered
- Supporting letter from the NRC (local lead educator, NCD).

9.33.b. Participants for the EMC are selected by the EAG in accordance to the following specifications:

9.33.b.i. Professional qualification to access: Graduate in Healthcare, Nursing, Medicine, or Health Sciences

9.33.b.ii. Educational profile

- Preferably a first degree or post graduate qualification in Education or Currently studying for a post graduate qualification in Education or Medical Education (Certificate, Diploma or equivalent)
- Experience of adult education (minimum of 3 years) within a health care setting (ERC courses or equivalent preferable).
- At least 4 years of continuous activity as a GIC instructor

9.33.b.iii. Preferably a clinical background and experience in the specialist field

9.33.b.iv. ERC Associate Gold Membership

9.33.c. In case of upcoming questions participants may be interviewed by a member of the EAG.

9.34. Become an EdC.

9.34.a. Successfully compete the EMC

9.35. Upgrade to Ed.

9.35.a. In order to become an Educator, the Educator Candidate needs to take part in the faculty of 2 GIC courses, under the guidance of experienced Educators, to the satisfaction of the Educational Advisory Group.

9.35.b. The Educator: Educator Candidate ratio should be 1:1.

9.35.c. During the EMC and the following courses, the EdC will be expected to fulfil the following expectations:

- Knowledge and practical application of adult learning principles
- Familiarity with ERC teaching strategies and techniques
- Expert communication skills (especially in the management of student behaviours and faculty support, with particular emphasis on competence in relational issues, effective feedback and presentation skills)
- Able to demonstrate competence in educational practice in managing teaching and learning (empathy, credibility, honesty, supportive attitude, individual and team orientated).
- Ability to organise, motivate and lead groups of instructors focused on achieving course learning objectives
- Ability to be flexible in managing candidate, faculty or programme related issues
- Preferably have an expert knowledge and demonstrable commitment to being contemporary in the evidence base supporting both education and health science

10.Recertification

Recertification of Providers

10.1. It is the responsibility of the holder of a certificate to maintain their skills. This can be done via recertification.

10.2. A current Full Instructor is deemed also to be a current provider for that type of course.

10.3. Providers may recertify in one of two ways:

10.3.a. Re-attending a full Provider Course and completing the assessments successfully.

10.3.b. Completing a recertification course successfully within 6 months of the expiration of their certificate (expiry date + 6 months). (Not applicable to Instructor courses, EPILS and NLS)

10.4. Upon a successful recertification the participant will receive a new Provider Certificate.

Recertification of Instructors

10.5. An instructor must teach on a minimum of two courses appropriate to each of his or her full instructor disciplines (BLS/AED, ALS, NLS, etc.) every two years. Failure to do so will result in reversion to IC status for that discipline. To regain full instructor status will require successful completion of one course as an IC. When Instructors reach their validity dates as Instructor, and their email addresses are correctly noted in the CMS, they will be notified by an automatic email (6 months before expiration). A Self-Sufficient NRC or the chair of the ICC for that course type can decide to extend the 2 year period to 3 years in case of an insufficient number of courses in that country over a period of 2 years to comply to this rule.

10.6. Each FI will be reassessed by a Course Director (on site), using the IC assessment tools, every six years. If they are registered in the faculty of a provider course between 4 and 6 years after their latest assessment, they are flagged for the CD and will be assessed on the faculty assessment screen. They must attend the entire course. Following a negative assessment, a second assessment by a different CD should take place within 1 year. If the second assessment is negative or not completed within the specified time, they will lose their FI status.

10.7. An IC status is only valid for two years, after which period a new instructor course (appropriate to the discipline(s) concerned) will have to be undertaken to regain instructor qualification. This period may be extended to three years upon individual application to the ERC Office.

10.8. Directing or Co-Directing a course also counts as instructing a course for recertification purposes.

Recertification of Instructor-Trainers (IT)

10.9. ITs should keep their FI qualification up to date.

10.10. Each IT will be reassessed by a CD (on site), every six years. If they are registered in the faculty of an Instructor course between 4 and 6 years after their latest assessment, they are flagged for the CD and will be assessed on the faculty assessment screen. Following a negative assessment, a second assessment by a different CD should take place within 1 year. If the second assessment is negative or not completed within the specified time, they will lose their IT status and will be referred to the NRC, self-sufficient for that course type, or alternatively the appropriate ICC Chair.

Recertification of Course Directors

10.11. A CD must be faculty member on a minimum of 2 courses every 2 years with at least one of these as CD, for each course type.

10.12. A CD qualified for several course types who maintains CD status for one course type will also remain CD for any other course types that they are FI for.

10.13. A CD who maintains CD status for a course type also remains FI for that course type.

10.14. Each CD will act as CDC and be reassessed by a Course Director (onsite), every six years. If they are registered in the faculty of a course, they are flagged for the CD and will be assessed on the faculty assessment screen. Following a negative assessment, a second assessment by a different CD should take place within 1 year. If the second assessment is negative or not completed within the specified time, the CD being assessed will lose their CD status and will be referred to the NRC, self-sufficient for that type of course, or the appropriate ICC Chair in other case.

11. Conversion

RC (UK)[4] courses and ALSG[5] GIC courses

11.1. Upon receipt of a copy of their RC (UK) certificate(s) issued for a course taught in the UK, RC (UK) ALS, ILS, EPALS, PILS, NLS and GIC Eds, EdCs, CDs, FIs, ICs, and IPs are respectively considered ERC ALS, ILS, EPALS, EPILS, NLS and GIC Eds, EdCs, CDs, FIs, ICs and IPs.

11.2. Upon receipt of a copy of their ALSG certificate(s) issued for a course taught in the UK, ALSG GIC Eds, EdCs, CDs, FIs, ICs, and IPs are respectively considered ERC GIC Eds, EdCs, CDs, FIs, ICs and IPs.

[4] RC (UK) is the Resuscitation Council (UK), registered in the United Kingdom under number
[5] ALSG is the Advanced Life Support Group, registered in the United Kingdom as a Charity under number 1095478

AHA[6] courses and ALSG[5] APLS courses

11.3. IP qualifications:

11.3.a. As the AHA does not select IPs during provider courses, AHA providers who would like to teach on ERC courses must be selected as IP on an ERC provider course.

11.3.b. ALSG IP's are considered ERC IP's for the similar course types.

11.4. AHA and ALSG IC qualifications are considered ERC IP.

11.5. FI qualifications:

11.5.a. Upon receipt of proof of their valid AHA instructor and provider qualification, AHA Heart Saver (First Aid) BLS/AED, ACLS and PALS FIs are respectively considered ERC BLS/AED, ALS and EPALS ICs.

11.5.b. Upon receipt of proof of their valid ALSG instructor and provider qualification, ALSG APLS FIs are considered ERC EPALS ICs.

11.5.c. For them to become ERC Full Instructor there are 2 possibilities:

11.5.c.i. Conversion course + minimum 1 course as IC

To have a one-day conversion course, focusing on the differences on educational approach with the ERC, followed by: Instructing successfully on one course as IC under supervision of an ERC FI, thereby becoming a FI.

Such conversion course is organised by the ERC and the National Resuscitation Council. The National Resuscitation Council covers the costs of the course and the faculty (travel, accommodation, meals).

11.5.c.ii. In situations where only some individual instructors need to be converted or if a conversion course is not available, either of the following:

- 2 courses as IC: Instructing successfully on two courses as Instructor Candidate under supervision of an ERC Full Instructor.
- Attend a relevant Instructor course followed by instructing successfully on one course as IC under supervision of an ERC FI, thereby becoming a FI himself.

11.6. CD qualifications:

11.6.a. Upon receipt of proof of their valid AHA director qualification and following one of these two options, AHA Heart Saver (First Aid) BLS/AED, ACLS and PALS CDs are respectively considered ERC BLS/AED, ALS and EPALS CDCs:

- having followed an ERC conversion course,
- if no conversion course is available, they can act as CDC on 2 ERC courses

NRC courses

11.7. National Resuscitation Councils who organise their own courses and would like to convert them to ERC courses can submit a request via the ERC Office. The relevant ERC ICC will consider the request and assess the courses currently being run by the NRC. This assessment may include the supervision of one or more course by the ICC or an audit of the courses.

11.8. There are three possibilities based on the result of this assessment:

11.8.a. The course system is accepted as **completely equivalent** to the relevant ERC course: in this case the existing qualifications or courses can be imported into the ERC Course Management System.

11.8.b. The course system is considered as **almost equivalent** to the relevant ERC course: in this case the same procedure as for AHA courses is followed.

11.8.c. The course system is considered as **not equivalent** to the relevant ERC course: in this case new pilot courses can be organised together with the NRC.

Other organisation's courses

11.9. Accepting courses of other organisations' than those listed above for conversion, is at the discretion of the Joint ICC.

[6] AHA is the American Heart Organisation, with registered offices 7272 Greeville Ave., Dallas, TX 75231, United States

12.Specific Rules according to Course Type

BLS/AED provider specific

12.1. The assessment may be undertaken either continuously during the practical sessions or during a separate assessment at the end of the course, at the discretion of the CD.

12.2. Minimum of 1 set of equipment (resuscitation manikin + AED) per instructor shall be available for a group of 6 candidates. When there are 2 instructors per 6 candidates, 2 sets of equipment are advised.

12.3. BLS Providers who wish to train to use an AED should complete the full BLS/AED Provider Course. This will allow for the revision of vital BLS skills that are an essential component of the AED use.

12.4. For courses up to 12 participants, BLS/AED Instructors can run a BLS or BLS/AED provider course without the physical presence of a Provider Course Director.

12.5. For more than 12 participants, the physical presence of a Provider CD is mandatory.

12.6. **ICs** of Advanced courses can act as BLS/AED provider IC. They have to teach on **two** BLS/AED provider courses to the satisfaction of the CD, before becoming BLS/AED provider FI.

12.7. **FIs** of Advanced Courses can act as BLS/AED provider IC. They have to teach on **one** BLS/AED provider course to the satisfaction of the CD, before becoming BLS/AED provider FI.

EPALS specific

12.8. At least 50% of the faculty must take care of children during their daily professional occupation. Either the CD or the CDC should be a suitably experienced medical doctor.

12.9. Assessment stations for EPALS are:

- BLS
- CASTest Station
- MCQ

12.10. Two CASDemo stations will be included in the course before the CASTeach. This should focus on the correct management of a cardiac arrest, critically ill child, or trauma and should last at least 10 minutes.

12.11. To maintain EPALS FI status you must instruct on two courses in two years, however, if you teach on an EPILS course this may count as 1 of these.

12.12. Candidates who have failed an EPALS course must attend and pass the EPILS course if they want an EPILS certificate.

EPILS specific

12.13. Assessment is continuous and is guided by the assessment forms provided for each core skill.

12.14. EPALS FIs can instruct and direct on EPILS courses. The CD should be fully involved in the organisation and delivery of the course. EPALS FIs who are active on EPILS courses will automatically receive the relevant EPILS qualifications in the CMS.

12.15. EPALS and EPILS ICs can instruct on EPILS courses and be listed as EPILS IC. If they teach two courses successfully under direct supervision of an EPALS or EPILS FI, they should be upgraded to EPILS FIs but these courses do not count towards their EPALS upgrade.

12.16. If an instructor maintains EPALS FI status, he or she also remains EPILS FI. If an EPALS instructor fails to maintain their FI status but teaches on enough EPILS courses (according to rule 10.4) they will keep their EPILS qualifications.

12.17.

NLS specific

12.18. Either the CD or CDC should be a suitably experienced medical doctor.

12.19. Assessment stations for NLS are:

- Airway Test
- MCQ

12.20. If human umbilical cords are to be used it is the Course Director's responsibility to follow the local rules in relation to written consent of the parent(s). For further guidance please see sample parental consent letter and requirements for the use of umbilical cords: "NLS 11 use of parts of the umbilicial cord_letter 2011".

ALS specific

12.21. Either the CD or CDC should be a suitably experienced medical doctor.

12.22. Assessment stations for ALS are:

- Initial Assessment and Resuscitation
- Airway Management
- CASTest Station
- MCQ

12.23. Each CASTest will last 10 to 15 minutes. The CASTests will include, as a minimum, ventricular fibrillation and one other life threatening rhythm.

12.24. Candidates who have failed an ALS course must attend and pass the ILS course if they want an ILS certificate.

12.25. To maintain ALS status, instructors must instruct on 2 courses in 2 years. If, however, they teach on an ILS course this will count as 1 of these.

ILS specific

12.26. Assessment is continuous and is guided by the assessment forms provided for each core skill.

12.27. ALS FIs can instruct and direct on ILS courses. The CD should be fully involved in the organisation and delivery of the course. ALS FIs who are active on ILS courses will automatically receive the relevant ILS qualifications in the CMS.

12.28. ALS and ILS ICs can instruct on ILS courses and be listed as ILS IC. If they teach two courses successfully under direct supervision of an ALS or ILS FI, they should be upgraded to ILS FIs but these courses do not count towards their ALS upgrade.

12.29. If an instructor maintains ALS FI status, he or she also remains ILS FI. If an ALS instructor fails to maintain their FI status but teaches on enough ILS courses (according to rule 10.4) they will keep their ILS qualifications.

12.30. An ALS FI who only instructs on ILS courses will fall back to ILS FI status and ALS IC status after two years without a sufficient number of ALS courses. They need 1 ALS and 1 ILS, or 2 ALS courses, in order to maintain their ALS FI qualifications.

BLS/AED instructor specific

12.31. Assessment is continuous and is guided by the assessment forms provided for each core skill.

12.32. GIC ITs who do not hold a BLS/AED provider or BLS/AED FI certificate, should first complete these steps.(12.6-12.7)

12.33. GIC ITs who hold a BLS/AED provider or BLS/AED FI certificate, can act as BLS/AED IT.

GIC specific

12.34. Assessment is continuous and is guided by the assessment forms provided for each core skill.

12.35. In order to be eligible to be selected as a GIC CDC, a candidate needs to be qualified as a CD of an Advanced course type.

12.36. European Trauma Course (ETC) IPs can attend a GIC and receive a certificate.

12.37. The presence of an Educator is mandatory for the GIC.

12.38. The key role of the Educator is to assure educational quality standards of the course; specific tasks include:

- To oversee the education process for the course
- To communicate key points of educational theories
- To have expertise in medical education
- To observe, critique, and guide candidates and faculty
- To focus on learning goals and achievement of the aims
- To facilitate teaching

EMC specific

12.39. An EMC can only be organised by the WGE.

12.40. The WGE can call experienced Educators connected to Resuscitation to the faculty of the EMC.

12.41. An EMC will be organised according to the needs of Educators announced by the NRC or the ERC.

12.42. The EMC aims to be a 1.5 - 2 day course covering the elements of adult learning, assessment, feedback, facilitating learning, fostering understanding and retention, dealing with CD and faculty on an GIG and quality management in the educational process of the ERC

13.Complaints procedure

13.1. Complaints related to a specific course:

13.1.a. A complaint can be submitted, within two months of the completion of the course or of a relevant event that occurred after the course:

13.1.a.i. by any individual(s) or organisation directly involved in the course: to the CD

13.1.a.ii. by the CD: to the NCD

13.1.a.iii. if the CD is the subject of the complaint: to the NCD (via the NRC if necessary).

13.1.b. In the first instance, the CD (or NRC) makes a decision within two weeks of having received the complaint.

13.1.c. If the solution is not considered acceptable, any of those involved may launch an appeal in writing within two months of the end of the course or of a relevant event that occurred after the course has been completed, to the National Resuscitation Council (if Self-Sufficient) or, in other cases, to the ICC chair for that course type.

13.1.d. That NRC or ICC chair will make a decision on the appeal within two months of receiving it, in line with the rules as described in this document.

13.1.e. If this decision is not considered to be in line with the rules as described in this document, any of those involved may elevate the situation, within one month of having received the decision, to the Joint ICC via the ERC office (cassation). The Joint ICC has six months to judge and has the power to revoke and request that the deciding authority provides an alternative solution that abides by the rules.

13.2. Removal of CO permissions and/or CD/Instructor qualifications:

13.2.a. The removal of CO permissions and/or CD/Instructor qualifications can only be discussed:

- during the appeal procedure of a complaint related to a specific course (13.1.a.i)
- following a complaint related to a specific course by a CD involved in that course (13.1.a.ii)
- following a complaint by a NCD about a CD related to a specific course (13.1.a.iii)
- based on an independent quality control report.

13.2.b. In the first instance, the Self Sufficient NRC of the country of residence of the defendant or in other case the ICC chair makes a decision within three months of having received the complaint.

13.2.c. Any of the parties directly involved may give notice of appeal to the Joint ICC via the ERC Office. The appeal procedure is suspending the first judgement, except when the JICC Chair decides that the risk of recurrence is a too high risk for individuals, for the quality of the courses or for the organisation.
The JICC will reconsider the decision taken by the Self-Sufficient NRC or ICC Chair, may ask any party involved for their opinion and will take a final decision, preferably within a time frame of six months after the appeal has been received.

13.2.d. If this decision is not considered to be in line with the rules as described in this document, any of those involved may elevate the situation to the Board via the ERC office (cassation). The Board has the power to revoke and request that the JICC provides an alternative solution that abides by the rules.

Overview complaints procedure:

	Basis	1st	Appeal	Cassation
Course related	Complaint	CD	SS-NRC/JICC	JICC
	Complaint by CD	NCD		
	Complaint about CD			
Withdrawal related	Complaint or QC (not individual)	SS-NRC/JICC	JICC	Board

14.Attached Documents

- ERC Code of Conduct
- Policy for Disabled Candidates
- Self-Sufficiency Document
- The IP selection form

v. 2.0
Final proposal approved by the JICC 11/12/2014

Approved by Board 12/12/2014

EUROPEAN RESUSCITATION COUNCIL

ERC Code of Conduct

Sept 2011 – v. 0.1

This Code of Conduct applies to all who instruct, or otherwise assist, on Courses held under the auspices of the European Resuscitation Council (ERC), which have been developed the teach to theory and skills of resuscitation.

It is important, therefore, that those accredited by the ERC:

- FULLY UNDERSTAND that accreditation and continuing accreditation is dependent on observing this Code as well as completing the necessary requirements for re-certification.
- ENSURE that courses approved by the ERC are run in accordance with its regulations currently in force using manuals, slides and other materials so as to ensure that consistent standards of knowledge and skills are achieved.
- BEHAVE, at all times, while participating in courses, or social events related to courses which are run under the auspices of the ERC, in a responsible manner and observe any other applicable professional codes of conduct.
- CO-OPERATE with other instructors, educators and administrators (the faculty) and recognise and respect their individual contributions.
- AVOID any abuse of their position.

EUROPEAN RESUSCITATION COUNCIL

ERC Policy for Disabled Candidates

Sept 2011 – v. 0.1

Candidates with disabilities are eligible to undertake ERC life support courses.

The ERC recognises its obligations not to discriminate against, and to make reasonable adjustments to their policies and procedures for those with disabilities in order to avoid any discriminatory impact and will do everything it can to assist those with a disability, and will ask its Course Organisers and faculty members to do the same.

Candidates should notify the Course Organiser of any disability before the start of the course and the Course Director should then make reasonable efforts to accommodate the candidates' requirements. For example, the Course Organiser may be able to make changes to the physical surroundings or, if a disabled candidate is physically unable to undertake a task, it may be possible to allow the candidate to instruct a proxy instead. However, any such changes should not cause a deterioration in the experience or training of the other candidates.

The award of an ERC certificate (whilst not a certificate of competence nor a licence to practise) indicates that a candidate has successfully completed a course and by inference has undertaken active participation. In some situations a disabled candidate might successfully pass all of the theoretical aspects of a course but, due to a disability, be unable to complete all of the physical course requirements.

Employers are themselves directly responsible for establishing that their staff has the capabilities requisite to their clinical setting – this is essential in the interests of patient health and safety.

Accordingly, they must not rely to any extent on the holding by an individual of a certificate from the ERC as lessening their responsibility in that respect.

EUROPEAN RESUSCITATION COUNCIL

Self-sufficiency in running ERC courses

Version 08/05/2011 Approved by the ERC Board on 25/05/2011

Introduction

In the context of countries/national resuscitation councils (NRCs) /organisations running ERC courses, self-sufficiency has meant having the authority to authorise such courses, to approve and/or to appoint course organisers (COs), course directors (CDs), and instructors, and to monitor the quality of the courses that are run.

To date, there are no agreed, uniform criteria and regulations for granting self-sufficiency status.
At the request of the ERC Board, this discussion document seeks to suggest solutions.

Current position

Several NRCs already have self-sufficiency status. Where such status has been granted, this has been for specific disciplines (e.g. BLS/AED provider; BLS/AED instructor; generic instructor), rather than necessarily for all courses.

There are a few non-NRC course centres which, by definition, are not subject to local quality control.

Proposals:

1. Self-sufficiency status should continue as at present for those NRCs who have been granted this, subject to a current agreement with the ERC and to the monitoring criteria discussed below.
2. Self-sufficiency should continue to be granted separately for each specified course.
3. Recognition of self-sufficiency for non-NRC course centres should, in principle, be discouraged. Any that are already self-sufficient for one or more discipline should be required to sign a Course Collaboration Agreement which should be valid for 2 years in the first instance.
4. In the future, any non-NRC centre/organisation seeking new or additional self-sufficiency shall require specific approval from the Board on the advice of the Chairman of the appropriate ICC.
5. Recognition of self-sufficiency for non-NRC course centres should cease as and when an NRC, that has an agreement with the ERC, is formed within the geographic area of activity of the course centre.

Future applications

For future applications for new or additional self-sufficiency status, criteria need to be agreed.
See: *Starting ERC courses Draft version 20.03.2008*

Proposals:

1. A country applying for self-sufficiency shall have an NRC with an Agreement (of cooperation and recognition) with the ERC.
2. This agreement shall include recognition of ERC courses of specified disciplines, e.g. BLS/AED; ALS/ EPLS; etc., run in that country.
3. The NRC shall make a separate application to the ERC for each discipline for which self-sufficiency is requested. This application shall contain the following information:
    (a) Name of the applicant and standing within the NRC
    (b) Discipline of course for which self-sufficiency is requested
    (c) List of course directors within the discipline with details of their Experience (see below)

(d) List of course organisers and instructors within the discipline
(e) List of courses of the discipline run within the previous 2 years
(f) Evidence that all criteria for the grant of self-sufficiency have been met or, if any criterion has not been met, an explanation and argument to be considered by the appropriate ICC.

NB: For c, d, and e the application may refer to the CMS if this is confirmed as accurate by the applicant.

4. The NRC shall agree to recognise all ERC CDs and instructors of the specified disciplines from all other countries.
5. The NRC shall agree that a course or courses shall be inspected by representatives of the relevant ICC(s) every 3 years, or more frequently if there is evidence that agreed procedures are not being followed.
6. These visits shall be at the expense of the NRC according to ERC travel regulations.
7. The NRC shall accept such audit systems as put in place by the ERC, which may include further inspection visits.

Criteria for self-sufficiency

It is important to agree what is meant by self-sufficiency in the context of running ERC courses.

Proposal:

'Having the **resources**, **expertise**, and **experience** to run courses, and having demonstrated an ability and commitment to maintain the **quality** of training agreed with the ERC.'

Using this draft definition, the criteria to determine if an NRC is ready to be self-sufficient in a given discipline can be formed.

Resources

These include human (sufficient qualified and available instructors), administrative (course organisers and CDs with proven ability and willingness to use the CMS), and material (suitable and adequate venues and equipment, such as manikins) for courses.

Course Organisers should have successfully organised a minimum number of courses each year.

The ERC guidelines for equipment and venue facilities should be followed, and feedback (from the Course Directors and/or from candidates) would be needed to ensure adherence to these guidelines.

The NRC should accept the Course Organiser criteria of the ERC as minimum criteria and should assess each Course Organiser at least on a 2-year basis.

Proposed criteria for self-sufficiency:

1. Sufficient instructors: NRC to have run at least 4 courses in the previous year.
2. Experienced Course Organisers: Each CO shall have organised at least 2 courses in the previous year.
3. Confirmation that teaching venues have the recommended equipment.
4. Certified copies of feedback forms from candidates covering venue resources.

Expertise

All ERC instructors used on courses within the jurisdiction of the NRC should be fully trained and have demonstrated their ability to teach. The CMS can provide information regarding the qualification and updating of instructors and there is already a system in place for monitoring upgrades.

It is important that a system of recording and monitoring feedback from candidates is put in place. The ERC is happy to facilitate such tools.

Proposed criteria for self-sufficiency:

1. Details from the NRC of a system for audit of instructors on at least a 2-yearly basis.
2. Certified copies of feedback forms from candidates to include comments on instructors.

Experience

A sufficient number of (successful) courses should have been run by, or on behalf of the NRC to ensure that the CDs, COs, and instructors gain sufficient teaching experience.

There are already rules in place to ensure that instructors teach on a minimum number of courses, or they revert to IP status.

Proposed criteria for self-sufficiency:

1. List of Full Instructors and ICs with details of teaching experience (may be obtained from EMS).
2. Confirmation that each Full Instructor has fulfilled the minimum ERC requirement for number of courses taught.

Quality

This is likely to be difficult to define. Feedback from course participants is being developed via the CMS and such data may well be the most practical way of measuring quality.

NRCs should be responsible (through their CDs) for ensuring that details of each course, the names of instructors, and feedback information from candidates are added to the CMS.

NRCs should be prepared to assess the courses, using the Audit Tool as provided by the ERC, and should accept audits by the ERC.

NRCs should be prepared and able to handle course-related appeals in accordance with the procedure detailed in the ERC Course Rules document.

Proposed criteria for self-sufficiency:

1. Certified copies of feedback forms from candidates to include comments on quality of courses.
2. A visit by representatives from the appropriate ICC to one of more training venue to observe a course in action.
3. Written agreement by the NRC of their ability and willingness to complete details in the CMS, audit courses, and handle course-related appeals.

The Board is invited to accept these proposals and to agree that they be used, initially on a trial basis, with review after each of the first three self-sufficiency application.

Approved by the ERC Board on 25/05/2011

EUROPEAN RESUSCITATION COUNCIL

Selection of an Instructor Potential

- **Course providers** can be selected by the course faculty as Instructor Potential (IP).
- IPs can then go on to attend an Instructor Course.
- In order to be successful in being put forward for Instructor Potential (IP), the candidate must score a minimum total of 18.

Candidate Name	
Course Date	
Course Director	
Nominated by	
Seconded by	

Candidate meets criteria	**Comments**		
1. Course provider		**2**	
2. Demonstrated excellent skill knowledge		**3**	
3. Demonstrated ability to communicate		**3**	
4. Demonstrated ability to work as a team member		**2**	
5. Enthusiasm		**2**	
6. Credibility		**3**	
7. Interactive, supportive		**2**	
8. Confident, flexible and adaptable		**3**	
9. Ability to critique		**3**	
10. Faculty advice		**2**	
TOTAL		**25**	

Overall Recommendation (tick one) IP ☐ Not IP ☐